Logic diagrams for Riedel Artist Intercoms

One of the more powerful parts of the Riedel Artist Director programming is the Logic construction ability.

This was an effort to create a record of power loss. The intent was to make a logic latch which, when triggered, would continue to show the error even if the power returned. It is done in 4 parts:
1. Installing a line powered relay at the UPS which would trigger a local GPI when there was a loss in power.
2. Sensing this gpi and latching an alarm, setting a button for that UPS to flash and say "PowerOFF"
3. Making an audible alarm sound which can be turned off, while maintaining the alarm condition indication.
4. Creating a way to reset this alarm.

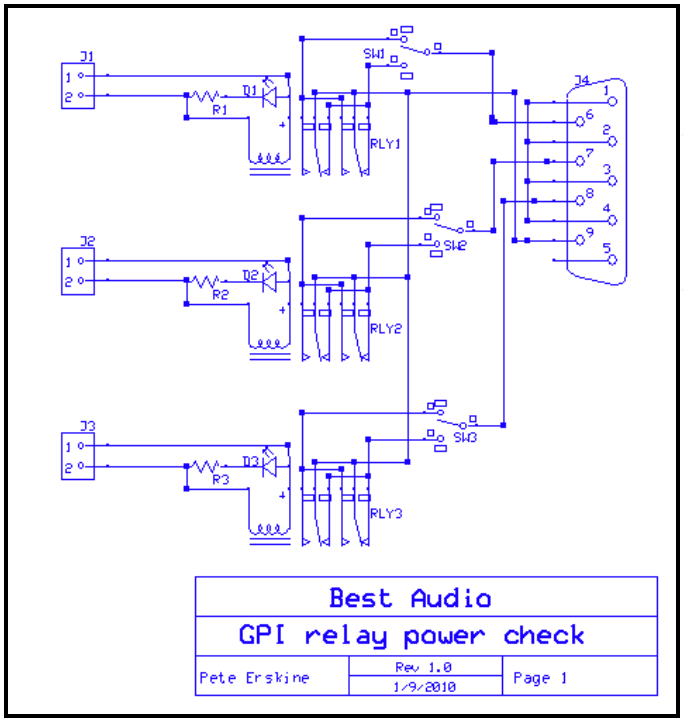

This schematic shows three relays which each get their power from a jack on the left. The output of each relay can be selected to NO (Normally open) or NC (Normally closed) to allow flexibility in sensing the power.

The power in is also connected to LEDs to show when they are energized. The output connector is a db9 male connector, wired for the GPI input on a Riedel panel.

We discovered that a closed contact caused extraineous triggering of the GPI id that was the normal setting. In this application, sensing if there is power present, we set the switch to NC so that when the power was on the relay was open. Loss of power closed the relay contact and reliably triggered the alarm

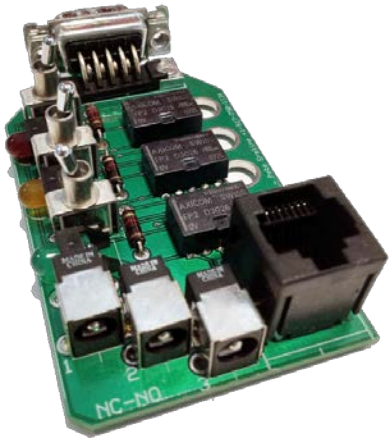

This version of the relay board has an rj45 connector as well which is in parallel with the DB9 to allow remote expansion.

In some installations of panels where the panel is mounted at a slope, the circuit board may not have room to be installed. I have some db9 cable extensions for that situation.

Three relays were built in to use the 3 GPI which are on a panel. For UPS and power monitoring one channel could be used for the power input to a UPS and one for the power output from a UPS or the single card could monitor three different circuits of power on the input side of the UPS's

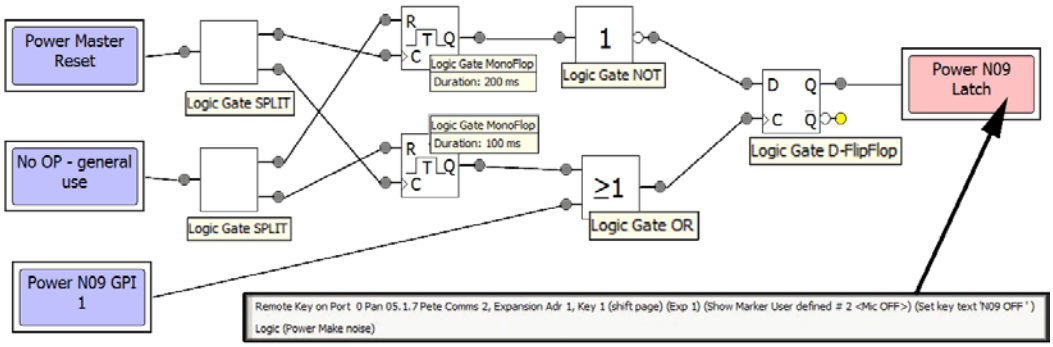

This turns out to be more complicated than previous Director versions needed. See the older method in the downloads section **HERE**. It uses this much simpler logic which has the output looped around to the input to latch.

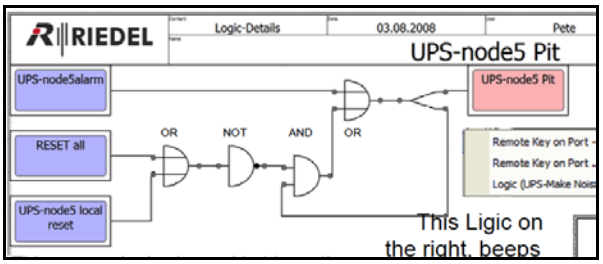

The new version of logic is not recursive and therefore a simple latching circuit is not possible. By recursive, I mean an output cannot be fed back into an input.

In this new version of Director we use a D flipflop which, when triggered on >C while D is on, stays in the on state. It can only be turned off when the D input is off. The Mono flipflops are timers - the top one holds the D input off for 200 ms and during that time the bottom timer cues the >C input and resets the output to OFF.

The result of this latch does 2 indicators: A button marker is flashed and the word on the button changed to "N09 OFF" and another logic function called **Power Make Noise** is triggered which beeps the panel. This single logic is triggered by any alarm. The **Power Mute noise** button latches on which will turn off the beeping. I usually turn this mute ON when I leave at night so if power goes off the others in the control room aren't driven crazy.

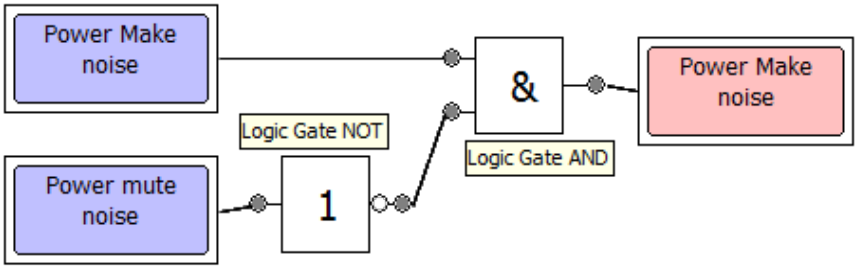

2012-07-01 07:24 AM

● Home ● HME DX200 ● Larry's Bio ● Peter's Bio ●
● Barcelona ● Pasadena Pops ● Torino ● Madonna ● Pope Benedict XVI ●
● 2004 Debates ● 2008 Debates ● 2008 Inaugural Balls ●
● Pictures ● Recent Credits ● Frequency Coordination ●
● Downloads ● Links ● Comments and questions ●

peterskine_at_aol.com